SPECIFICATION

Customer :

Applied To :

Product Name : Dynamic Speaker

Model Name : VS35x16R8F850P2

Drawing No. : VS20221129012.01

Signature of Appronal

Signature of Voise

Approved by	Checkde by	Issued by	Date

福爱斯电子有限公司
VOISE ELECTRONICS CO.,LTD.
Address:No 96 Mogao Dongqian Lake Industial Area ningbo,China,
Tel:0086-0574-87773030;Fax:0086-0574-87471600 P.C.315121
http://www.nbvoise.com Email:sales@nbvoise.com

CONTENTS

1. Scope

This specification is applied to the dynamic speaker which is used all of the electrical acoustic product.
-- compact, rich sound
-- applications: mobile phone, PDA, notebook computer, etc. ..

2. General

2.1 Out-Diameter : 35x16 mm

2.2 Height : 5.3 mm

2.3 Weight : 2.6 g

2.4 Operating Temperature range:

-20~+60℃ without loss of function

2.5 Store Temperature range:

-30~+70℃ without loss of function

3. Electrical and Acoustic Characteristics.

Test condition : 15 ~ 35 ℃, 25% ~ 85% RH, 860~1060 mbar

No	Items	Specification
1	Impedance	8 Ω ± 15% (1Vrms at 2KHz)
2	Sound Pressure Level	88 dB ± 3dB (at 0.1m/0.1w at 0.8,1.0,1.5,2.0kHz Average)
3	Resonance Frequency	850 Hz ± 20% at 1Vrms
4	Frequency Range	f0~20KHz
5	Input Power	Rated 2 W / Max. 2.5 W
6	Distortion	<10% Max. at 2kHz 2W
7	Buzz and Rattle	Should not be audible buzzes,rattles when the 4V sine wave signal swept at frequency range.
8	Polarity	When supplied plus D.C. voltage to (+) terminal, the cone diaphragm must move to forward.
9	Waterproof	IP60

4. Reliability Test

After test(1~7item), the speaker S.P.L . difference shall be within ±3dB, and the appearance not exist any change to be harmful to normal operation (e.g. cracks,rusts,damages and especially distortion).

No	Items	Specification
1	High Temperature Test	After being placed in a chamber with +70±3 ℃ for 100 hours and then being placed in natural condition for 1 hour, speaker shall be measured.
2	Low Temperature Test	After being placed in a chamber with -30±3 ℃ for 100 hours and then being placed in natural condition for 1 hour, speaker shall be measured.
3	Humidity Test	After being placed in a chamber with 85 to 90%R.H. at +40±2 ℃ for 100 hours and then being placed in natural condition for 1 hour, speaker shall be measured.
4	Thermal Shock Test	After being placed in a chamber at +60℃ for 2 hour, then speaker shall be placed in a chamber at -20℃ for 2 hour(1 cycle is the below diagram). After 4 above cycles, speaker shall be measured after being placed in natural condition for 10 Sec.. 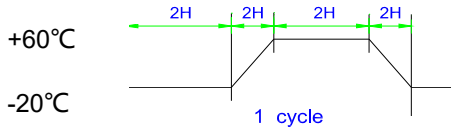
5	Vibration Test	After being applied vibration of amplitude of 1.5mm with 10 to55Hz band of vibration frequency to each of 3 perpendicular directions for 2 hour, then placed in natural condition for 1 hour, speaker shall be measured.
6	Drop Test	The speaker when mounted in the jig which weight 85g~100g, shall with stand 5 times random drops from a height of 1.0 meter to a concrete floor faced with 5mm thick hard wood board.and be nothing mechanical damage.
7	Load test	After being applied loading white noise with input power 2W(4Vrms.) for 100 hours, then placed in natural condition for 1 hour, speaker shall be measured.
8	Insulation test	When they are measured with DC 100V the insulation resistance between v.c. terminal and frame must be more than 1 MΩ

5. Measurement Block Diagram & Response curve

Standard test condition of speaker

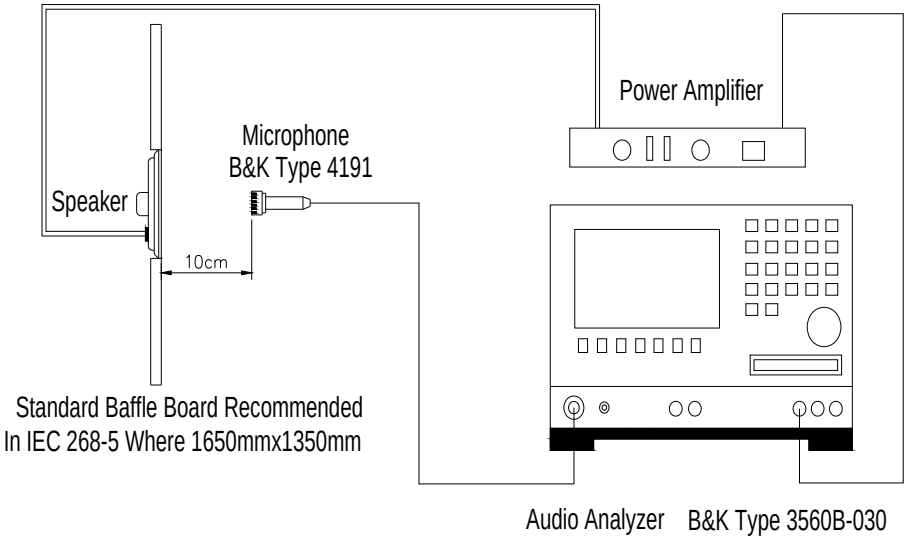

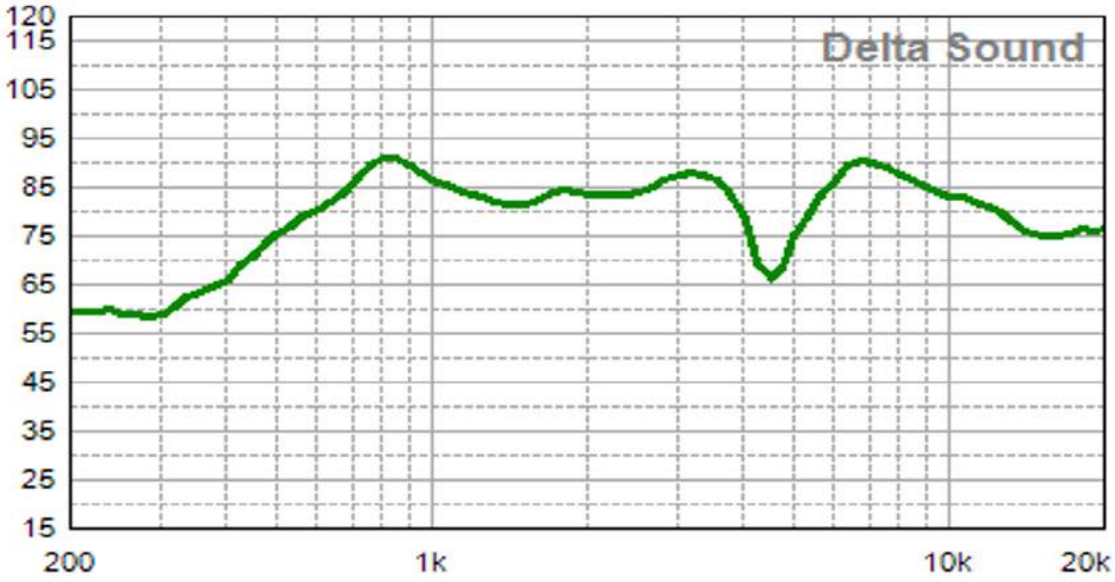

Brüel & Kjær

6. Dimensions

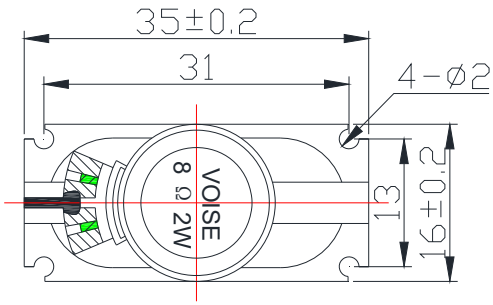

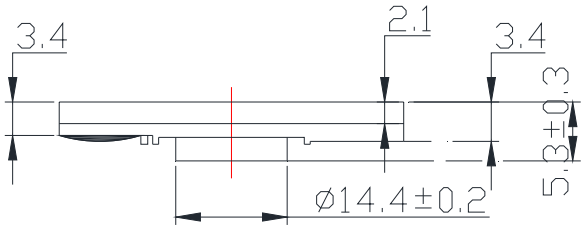

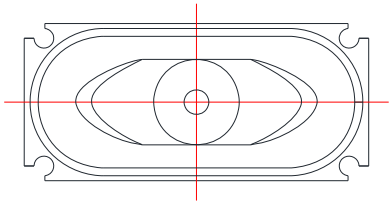

No.	Part Name	Q'ty	Material	Remarks
7	Yoke	1	SPCC	
6	Terminal	1	Epoxy	
5	V-coil	1	Paper+Cu	
4	Plate	1	SPCC	
3	Magnet	1	Nd-Fe-B	
2	Diaphragm	1	Cloth	
1	Frame	1	SPCC	

7. Packing

A Customer Specification

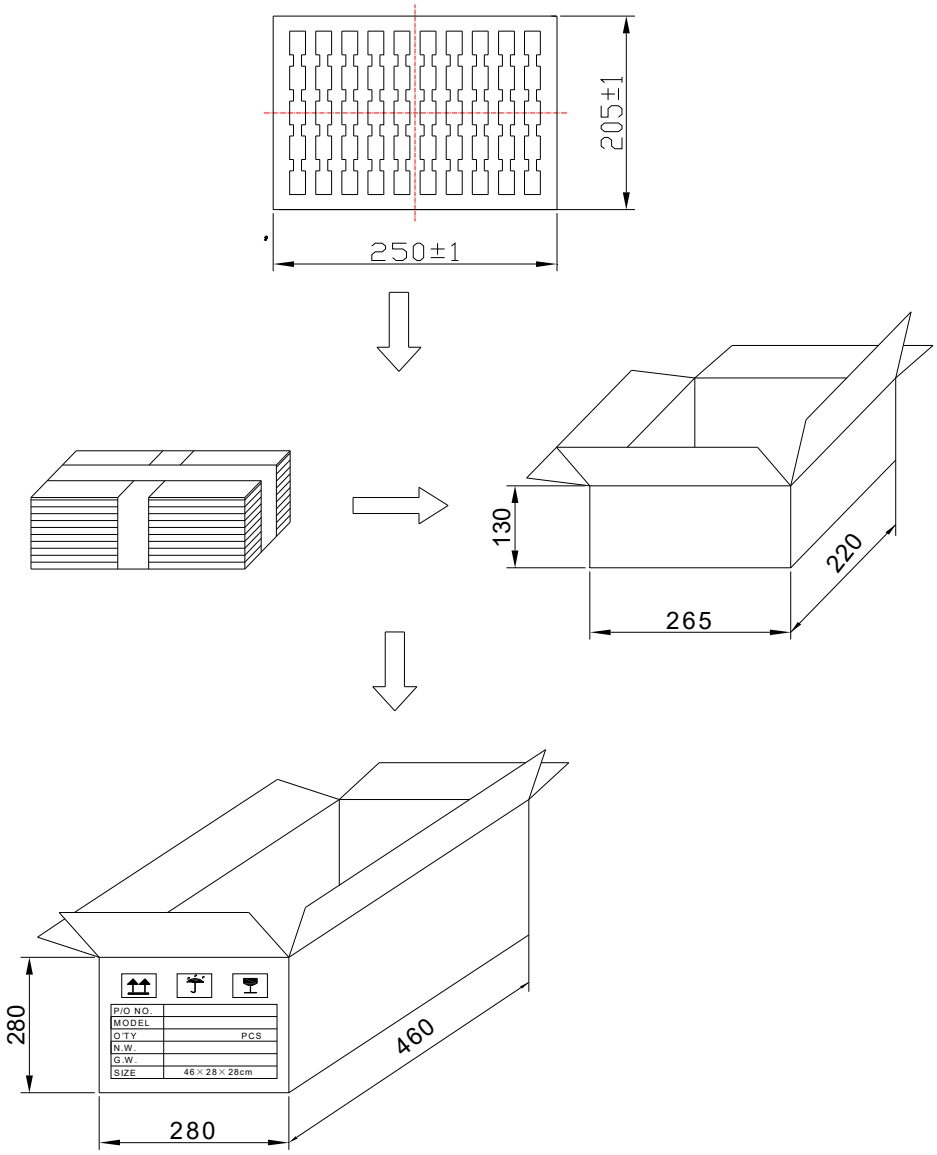

50 pcs per tray

20 trays for unit

Total:2000 pcs per carton

Size:46×28×28cm

8. Revision

Rev. No.	DATE	PAGE	DESCRIPTION	BOM
1.0	2022-11-29		Primary	
1.1	2024-11-4		1W->2W	